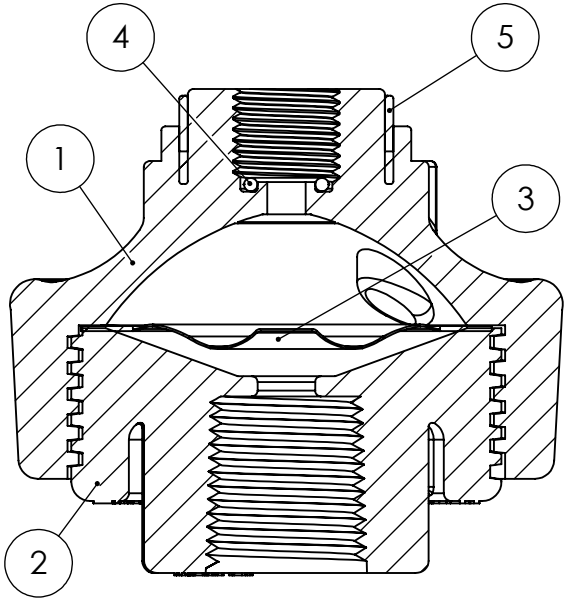

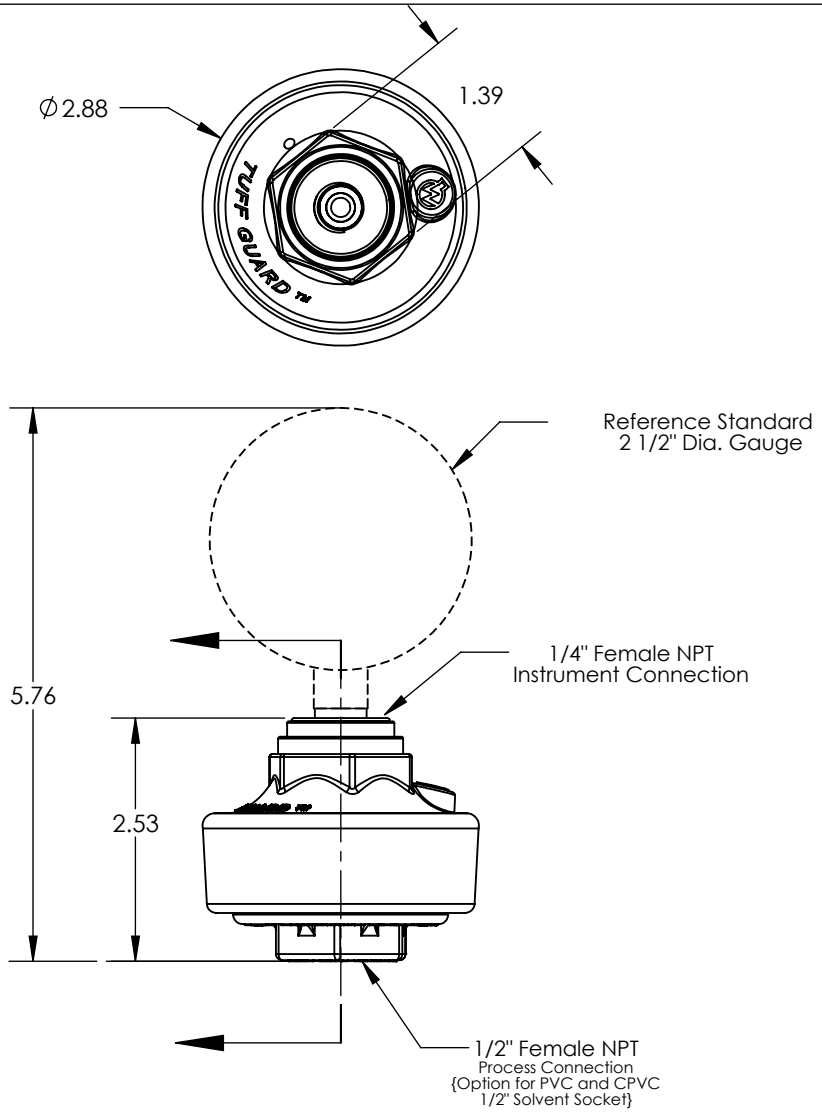

No.	Description	Qty.
1	Upper Chamber	1
2	Lower Chamber	1
3	Diaphragm	1
4	O-Ring, Instrument Seal, FKM	1
5	Ring, Reinforcing 316 SS	1

DRAWN	Pete Stulik	6/5/2013
CHECKED	C.W.	
ENG APPR.		

PROPRIETARY AND CONFIDENTIAL

THE INFORMATION CONTAINED IN THIS DRAWING IS THE SOLE PROPERTY OF Marquest Scientific, Inc. ANY REPRODUCTION IN PART OR AS A WHOLE WITHOUT THE WRITTEN PERMISSION OF Marquest Scientific, Inc. IS PROHIBITED.

COMMENTS:

DIMENSIONS ARE IN INCHES
DO NOT SCALE DRAWING

MARQUEST SCIENTIFIC
Fluid Handling Products
Marquest Scientific, Inc.
Costa Mesa, CA 92626
www.MQSites.com | Toll Free
(866) 452-2349

TITLE:

TUFF Guard Isolator
1/4" Female NPT Instrument Connection x
1/2" Female NPT Process Connection
Ref. 2 1/2" Dia. Standard Gauge

SIZE	DWG. NO.	REV
A	TG-25XXXXS-XXX	A

5 4 3 2 1