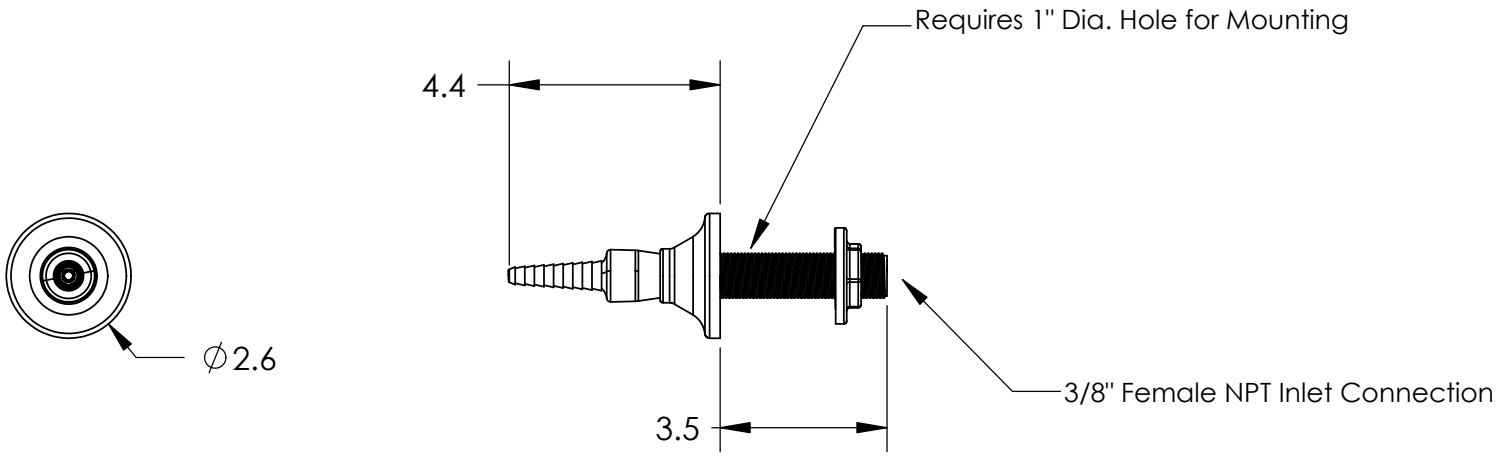

Material Designation Number Add to End of Part Number	
1	PVC, Dark Gray
2	Natural Polypropylene
3	Natural PVDF

UNLESS OTHERWISE SPECIFIED:		NAME	DATE
DIMENSIONS ARE IN INCHES TOLERANCES: FRACTIONAL ± ANGULAR: MACH ± BEND ± TWO PLACE DECIMAL ± THREE PLACE DECIMAL ±	DRAWN		
	CHECKED		
	ENG APPR.		
	MFG APPR.		
INTERPRET GEOMETRIC TOLERANCING PER:	Q.A.		
MATERIAL	COMMENTS:		
FINISH DO NOT SCALE DRAWING			

PROPRIETARY AND CONFIDENTIAL

THE INFORMATION CONTAINED IN THIS DRAWING IS THE SOLE PROPERTY OF MARQUEST SCIENTIFIC, INC.. ANY REPRODUCTION IN PART OR AS A WHOLE WITHOUT THE WRITTEN PERMISSION OF MARQUEST SCIENTIFIC, INC. IS PROHIBITED.

Marquest Scientific, Inc.
2950 Airway Avenue, Bldg. C5, Costa Mesa, CA 92626

TITLE:
Laboratory Base
Remote, No valve

SIZE	DWG. NO.	REV
A	LB-R	

SCALE: 1:4 | WEIGHT:

5 4 3 2 1